PG79369 PG79368 PG79367 2.97V-16V 7A eFuse Protection Switches With Accuracy Current Monitor and Transient Overcurrent Blanking

Features

- Wide input voltage range: 2.97V to 16V
- Integrated 5.8mΩ Pass MOSFET
- Fast over-voltage protection
  - OVCSEL: Overvoltage clamp with pin selectable threshold (3.89V, 5.76V, 13.88V)
  - OVLO: Adjustable overvoltage lockout
- Overcurrent protection with load current monitor output (ILM)
  - Active current limit or circuit-breaker
  - Adjustable 0.87A to 7.7A current limit
  - Adjustable transient blanking timer (ITIMER) to allow high transient current
- Fast-trip response for short-circuit protection
- Adjustable output slew rate (dVdt)
- Enable with adjustable input UVLO threshold
- Built-on over temperature protection
- Fault indication or power good indication
- RoHS compliant and Green

Applications

- Server, PC mother board
- PCI and PCIe cards
- Appliances and power tools
- Smartphones and tablets
- Industrial system

Description

The PG79369/368/367 devices are active circuit protection devices with an integrated MOSFET used to limit current and voltage to safe levels during fault conditions.

The current limit level can be set with a resistor between ILM and ground.

The device has over voltage protection feature which either limits the output voltage to a fixed level or cuts off the output when input over voltage fault occurs.

To limit the inrush current during device turn-on, the rising slew rate of output voltage can be set by a capacitor between dVdt and ground.

The device also offers EN on/off control and input UVLO features.

The device is available in QFN-10 pins, 2x2 mm package.

Typical Application Circuit

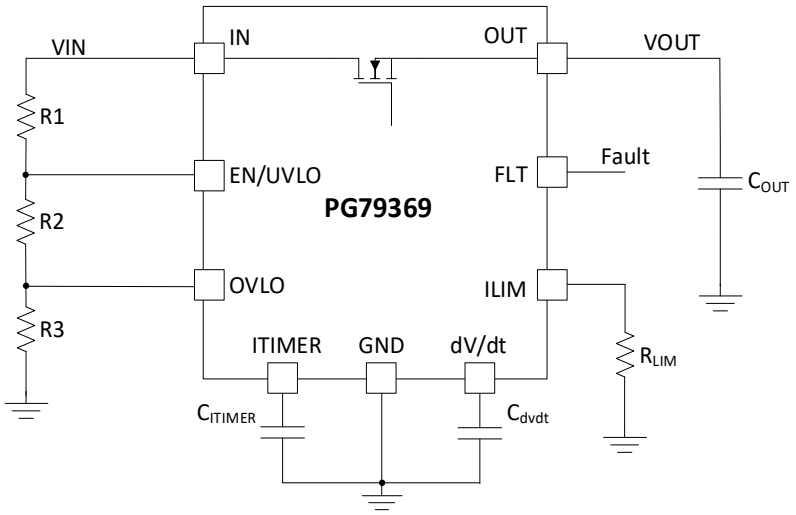

IPG SEMICONDUCTOR (SHENZHEN) CO.,LTD. All rights reserved.